URI to SCOM 7330 INTERFACE

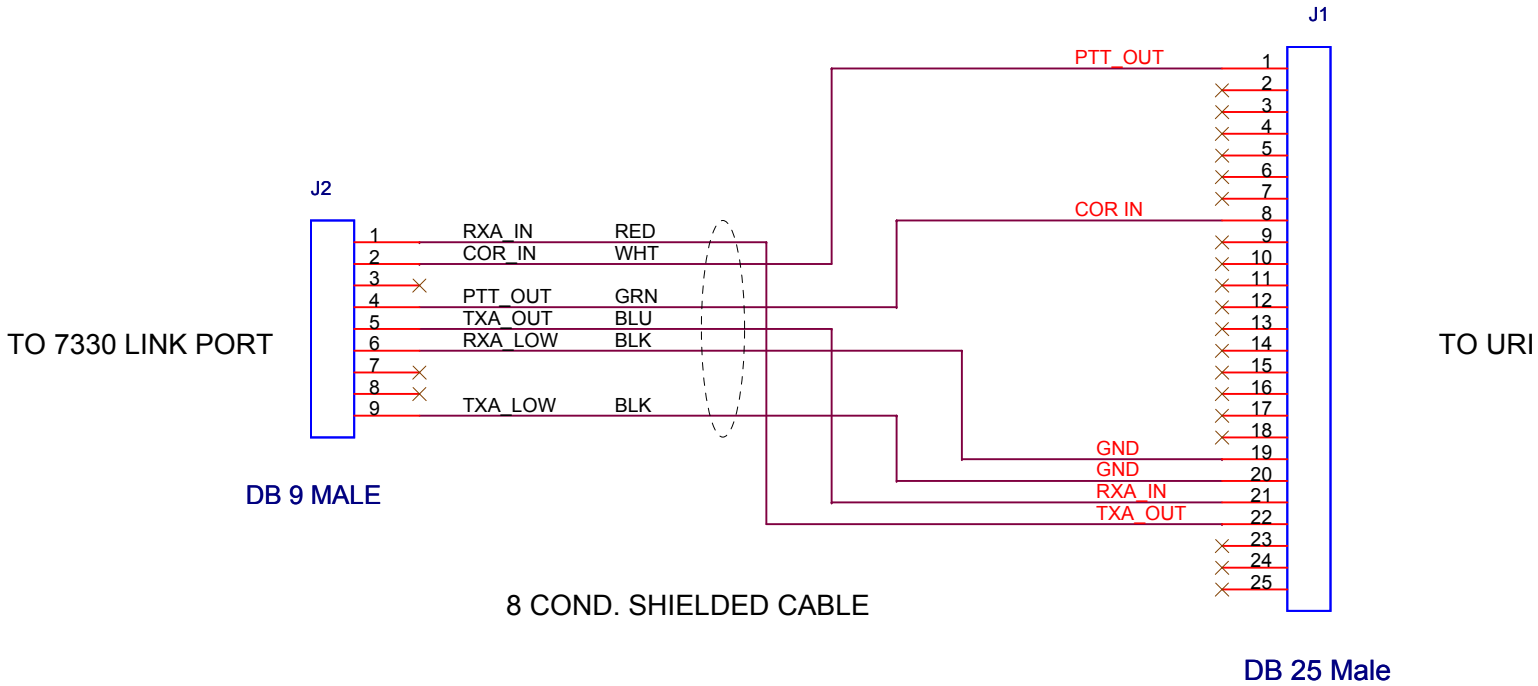

NOTES:

X = NO CONNECTION

VA3RQ		
Title: URI TO 7330 INTERFACE		
Size: A	Document Number: 2013 02 03 004	Rev: N/C
Date: Sunday, February 03, 2013	Sheet 1 of 1	